Waves 360° Surround Tools

Software Audio Processors

Toolkit Overview

Preface

5.1 Surround Sound originated in Cinemas and is still strongly related to the Film soundtrack industry. It has since successfully made its way into the homes of many consumers in entertainment systems generally referred to as Home Theater. Indeed, many current home entertainment systems are equipped with a DVD player and a 5.1 surround sound system consisting of 5 satellite speakers and a Subwoofer. The Film Soundtracks are adequately mixed for such playback systems. Nowadays it is standard for television, film and many DVD titles to have a surround sound track encoded in one of the common formats. Also, audio-only titles with high-quality surround sound are being produced more and more. New standards are still rising and falling, but the concept of Surround Sound is here to stay.

The Pro Audio industry has made a quantum leap in providing tools specialized to Surround Sound productions. What was once done by working with 2 or 3 stereo busses, using sophisticated routing schemes and matrices, is now “Embedded” into many Digital Audio Workstations with multichannel functionality integrated to the normal environment offering multichannel channels, inserts, sends and busses as well as basic multichannel panning devices.

Waves has been excited about Surround Sound and its possibilities. We conducted years of research that suggested many specialized tools to integrate into this new reality and provide an intuitive approach to producing audio in a surround sound stage. The **Waves 360° Surround Toolkit** is the first fruit of this research and is focused on practical and basic tools to both enhance and ease the surround sound production process. Each of the plug-ins was specially designed to be as intuitive and friendly to use with the highest possible audio processing quality. Each component comes to serve where specialized multichannel considerations require special attention and to answer common needs raised by surround audio production professionals. We interviewed and consulted with many of them for this project.

Specific areas where we spotted the need for a specialized approach will be discussed further in this overview.

Panning

Most available solutions offer X/Y panners. These let the user position the source channels in a square matrix which has the output speakers set in its extremes and distributes the energy among them according to the X/Y coordinates set in the Panner. X/Y Panners are very useful to designate discrete sources to discrete speakers. When you have a Stereo source, however, designating the input to anywhere other than the Left and Right channels of the surround stage will simply distort the stereo image and its contained directional phantoms. Furthermore, using X/Y panners, any “in between” setting makes it harder to determine the exact direction of the phantom image as it will simply appear in perfect correlation in many speakers at once creating simple divergence.

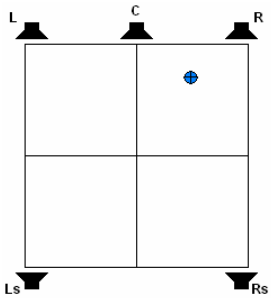

Basically this leaves you with the outer boundary of your Panner as a real panning stage, positioning your sources in between pairs of speakers. The whole body of the matrix is a big divergence stage that will only de-localize the direction of the phantom images you are trying to make. Divergence can be a wanted effect, but let’s say you want a certain source to be spread over the 3 speakers of your front stage only. Doing this with an X/Y Panner will either make you give up the idea altogether or leave you searching for creative ways to achieve this.

Waves S360° Panner and **Imager** regard Surround as a sound stage that surrounds the listener 360°. If the application you seek is to position your sources 22° left and spread it or stretch it 1.5 times wider, then S360° is the tool you need. The Panner and Imager have a choice of pair-wise or triple-wise rotation pan pots to use speaker pairs or 3-speaker panning. The **Panner** and **Imager** offer a choice of *Width* pan-pots to provide a suitable method for spreading a given image wider or narrower in relation to its rotation.

The **Imager** further incorporates *Distance Panning*, offering statistical room modeled *Early Reflections*. The reflections are calculated according to the *rotation* of the direct signal. This helps to enhance localization and stabilize the direction of phantom images further away from the sweet spot.

Shuffling of low frequencies is another sweetener incorporated into the **Imager** to increase spatialization,.

The **S360° Panner** and **Imager** do not conflict with other methods used for other sources. You can use X/Y panning where it suits you and use the **S360°** when needed. The **Panner** is quite DSP-efficient. The **Imager** is more DSP power consuming. You can hot-switch between **Panner** and **Imager** and all common controls will inherit the existing settings, so you can start with a **Panner** and "upgrade" to an **Imager** when needed.

Reverberation

Surround Reverberation presents a few challenges. The input to the reverb may be mono, stereo or multichannel and the reverb tail needs to be high quality, pitch preserving, rich, smooth and decorrelated in all speakers. Using multiple stereo reverbs (with slightly different settings) works well when you are using multiple stereo routing. When you are in a multichannel routing environment nothing can be better than a dedicated Surround Reverb.

Most Digital Reverbs generate Early Reflections and Tail Reflections separately but within the same unit. Early reflections should be related to panning; otherwise they would distort localization rather than enhance it. Incorporating a distance **Panner** into a Surround Reverb would take a lot of DSP horsepower. To make the correct balance, we have the Distance Panning incorporated into the **S360° Imager**, so you can regard it as the first part of a Room or Virtual Space processing suite.

The **R360°** then comes along to provide the smoothest, richest and decorrelated Reverb Tail. It has special controls to offset filters and pre-delays between the front and rear stages. **R360°** uses all it's power for creating the diffused Reverb Tail reflections at the highest quality possible. This is still considerably heavy processing, equal to 3 stereo reverbs. Processing in 96kHz requires a doubling of the process power again. To address DSP power considerations, the **R360°** has 2 components, a normal component and a "Compact" component designed to consume less DSP power for the same overall features and control set. The sound is different but the tradeoff is obviously one of power vs. quality and your ears will have to guide you to make the correct choice. Note: the Compact component is available only on Pro Tools HD systems. It will not run on Pro Tools Mix systems.

A recommended practice is to put the Reverb 100% wet on an auxiliary and send dry or distance-panned sources to reverberate them appropriately. Both **S360°Imager** and **R360°Reverb** have a Factory presets mode "Virtual Spaces" with the same preset names. These are preset pairs designed to work well together and will work nicely for multiple **Imager** instances sent to the same Reverb auxiliary or as needed. The presets are definitely made to provide good starting points for further tweaking.

Dynamics Processing

Processing the dynamics of a program in Surround Sound adds further considerations to the issue of channel linking and process coupling.

In Stereo dynamics processors it is typical to detect the energy in the channels separately and apply the same dynamic gain adjustment to both channels preserving their relation and intended stereo image.

In surround, this concept is expanded into 6 channels where you may want to preserve the image relationships between all channels that are involved in creating the phantom directions of a certain “Image”. This can depend highly on the production discipline you are following. As a rule of thumb, we can regard the satellite channels as the directional stage that should be coupled to undergo the same dynamic gain adjustment. Dynamics required for the LFE should not affect the other channels.

In the **Waves 360° Surround Toolkit** we included the **L360° Limiter** and the **C360° Compressor**. They are extra fast to set, providing great results. Both offer many choices and flexibility in the linking and coupling scheme. The plug-ins can have up to 3 separate side-chains. You can use the Link Mode selector control to define which channels are coupled to which side-chain. The selected link mode will provide separate Threshold and Out Ceiling controls for individual groups, but global Threshold and Ceiling controls are available for linking all channels under control.

The capacity in these 2 extra-practical processors exceeds anything you would be able to do with multiple mono or stereo devices, even if they had dedicated sidechain inputs. Both tools are in the heritage of existing Waves dynamics processors adding the Link modes, so the sound may be familiar, but the Link modes are the Gospel according to Surround Sound.

Calibration and Bass Management

Studio Monitoring calibration is important, so that what you make in the studio will translate optimally to the outside world. In Surround sound it’s even more important because there are more elements, and therefore more chances of mismatches. Bass Management is essential for proper use of a Sub/Satellites (“sub/sat”) speaker system.

The **Waves M360° Manager** and *Mixdown* help you calibrate your studio perfectly and apply precision Bass Management within your DAW. Using the **M360°** can save you the need to buy a lot of hardware for these purposes.

Most of the titles that have 5.1 Surround Sound will be played back on a system that has 5 satellite speakers and a subwoofer. The playback system usually will have a Bass management system of its own built-in. For this reason, it is even more sensible to use a similar system in the studio, even if your monitors are considered full-range.

Redirecting the Low Frequencies of all channels to the subwoofer will improve the efficiency of your monitors and their ability to play sound more transparently. The signal directed to the sub will be integrated with the audio in the LFE channel where the LFE channel will be played 10dB louder than its printed gain.

The LFE and SUB are sometimes confused with each other. It's important to know that the LFE is a channel created in production and the Sub is created during playback by the Bass Management system of the playback device.

For this reason we kept the separation of LFE and SUB apparent in the Manager's Graphic interface although they will both play out of the LFE channel's physical output.

The **M360° Mixdown** simply allows you to audition or create a mixed down version of the discrete 5.1 surround mix. You can select Mono, Stereo, LCR or LCRS.

More Tools

To complete the Toolkit, we made two more handy plug-ins:

LFE360° Low-Pass Filter is a steady 7th order filter that presents extra steep response with no overshoot at all. This filter can be used on a mono or 5.1 multichannel insert, but it will only affect the .1 or the LFE channel. At its default setting it will act like filters used for the LFE channel when using common encoding technologies. We made this filter as a separate component, once again, to be sensitive to DSP consumption.

IDR360° Bit Requantizer is an *Increased Digital Resolution Dither* and *noise shaping* plug-in dedicated for cases where you shorten the wordlength of your 24-bit master to 20 or 16 bits. The **IDR** will make sure to preserve as much as possible of the perceptual resolution of the source down to the designated bit rate.

Production Disciplines.

In Surround Sound there are many new things all the time. Formats as well as new encoding technologies and new media authoring solutions arrive and depart. There are different recommendations for how and where to place your speakers. There is much confusion for a lot of people who are thinking of producing surround titles for the first time.

In our experience, surround sound production is fun and creative. If you take the first step and start doing it, you will begin to acquire the experience and gain valuable expertise. The **Waves 360°** was designed to be highly practical for producing music as well as soundtracks by providing a set of tools that makes this almost “easy”.

During our research we found people who are using many different methods for doing their surround projects. All of them would let us listen to something that sounded nice and fresh, although the variety was large and the differences in production approaches were quite apparent.

If one would comment on the work of the other, a deep abyss would open up between them. We realized one thing, we need some common ground to start from, some default from which we can enhance or improve further. We found that 5.1 and ITU were most commonly brought up and so we went for it.

The **Waves 360° Surround Toolkit** follows the reproduction standards recommended by the International Telecommunications Union in the ITU-R BS.775 (1993). We found that most industry professionals agree that this is at least a sane recommended default. The principle of the recommendation is based on 5 matched speakers placed at equal distance to the Middle of a circle which will be the “sweet spot”. The front speakers are located ±30° of the center and the surround speakers ±110°.

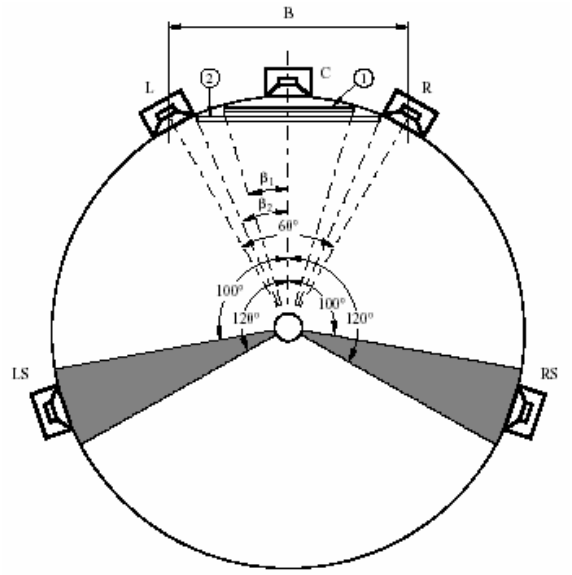

Film Soundtrack

In Film Soundtrack production we found that there are some basic rules and conventions that are standard. The Center speaker is used mostly for direct dialog. The Front L, R speakers are used for Music, Backgrounds, Sound FX, Foley and Ambience. The Rear Ls, Rs speakers are used mostly for Ambience and Sound Effects. The LFE is used for Low Frequency Sound Effects enhancement.

This type of usage suggests thinking of the sound track as Multiple sound stages. One grouping is: Center, Left & Right, Left surround & Right surround and the LFE. Another would be: Center and Quad stage (L, R, Ls & Rs). These disciplines suggest that **S360° Panner** or **Imagers** be set to *Phantom Center* for anything other than Direct Dialog.

Ambience to the rear can be generated with distance panning and sending to the **R360°** which should also have the Center "Off" in the *REVERB MIX* section. Sound Effects can be positioned rather freely. When moving sound effects we suggest to first render the movement with proper Doppler effect and then position it between the movement points. It is recommended not to rely on precision side phantoms of 65° to 100°. If you do pan direct sources that way, we recommend using pair-wise *Rotation* pan-pots.

Music

In Surround Music production we found many different approaches. In most cases, the usage of the Surround stage was to enhance the generally frontal experience. In many cases, the surround speakers were used for ambience, enhancing mainly the feeling referred to as "envelopment". In some Live Music, the Rear speakers were used for Audience, giving the listener a greater

sensation of “Being there”. Others simply relate to the Circle as a 360° Sound stage and rotate sounds and effects all around. When overdone this may get the listener slightly seasick, but when used moderately this can actually make the music more exciting. The LFE channel was usually useless. If it was used, then it was used as a means of Bass Management! This is something we recommend against, maintain your main channels with full-range information and use the LFE channel only to support a certain full range event with additional low frequency effects. Bass Management is best left for the playback system because it is critical that the properties match the hardware specifications. In production, we do recommend to use the **M360° Manager** for bass management, feeding the LFE channel to play the Subwoofer signal. This will also allow customers to assume the LFE channel is used and there are getting the full thing. There’s no point in placing full bandwidth sounds only in the LFE as they will mostly sound like Low Frequency disturbance.

Other wise, just use the complete 5 speakers sound stage as creatively as it makes sense.

Points to remember

A few pieces of advice to users in need:

- The LFE is not a channel designed for carrying the Low Frequency content redirected from the Satellite speakers. Print your 5 directional channels to the master at full range and bypass all Bass Management and calibration when you print your master.
- Bass Management goes on in most playback systems and its specs are designed to match the other properties of the speaker system.
- Side phantoms created between the L and Ls or R and Rs are the first to become vague in a non-calibrated system.
- Distance Panner's Early reflections are designed to enhance localization and sweet spot. Reverb reflections are designed not to interfere but be as spacious and dispersed as possible.
- Pushing levels in the last stage may make your Stereo compatible Mixdown clip. Use the Mixdown manager to preview your Stereo sum and in any case when the material will undergo further encoding keep a safe ceiling of at least -0.2 dB.
- The Panner's *rotation* does not account for Doppler effect and automating it for traveling phantoms will not necessarily be true-to-life. When using distance panning, unlink the Room Size and distance if you want to automate the distance otherwise zipper noise will occur. When doing static distance panning, the link works to place the sound close to the end of the room, which our research indicated to be most convincing.